LITETRONICS®

PROJECT:			
CATALOG #			
TYPE:		DATE:	

LED EXIT SIGN

RED-GREEN

DESCRIPTION

The Litetronics LED Exit Sign delivers simple, dependable, high visibility egress illumination with durable housing and dual adjustable square red/green lenses. Delivering crisp illumination while consuming only 0.8W, ensuring high efficiency and reliable performance, and UL924 certification ensures full life safety compliance.

Installs fast for wall, end or ceiling mount, with left/right punch-out arrows, removable faceplates for double-face configuration.

The Litetronics LED Exit Sign offers long term value and robust performance across offices, retail, hospitality, schools, hospitals, multi-family, and more.



MARKETS

- Commercial & Office
- Schools, Campuses, Day Care
- Car Dealership
- Retail
- Event Centers
- Warehouses, manufacturing plants, distribuition centers
- Hospitality
- Healthcare



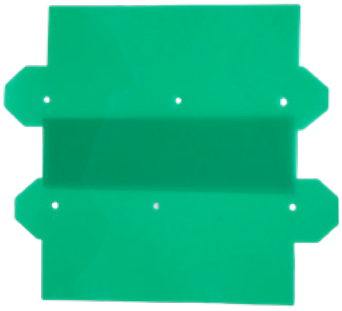

DIMENSIONS / WEIGHT

Order Code	Length	Width	Height	Weight
EXRG	11.61″	1.57″	7.20″	2.03 lbs.

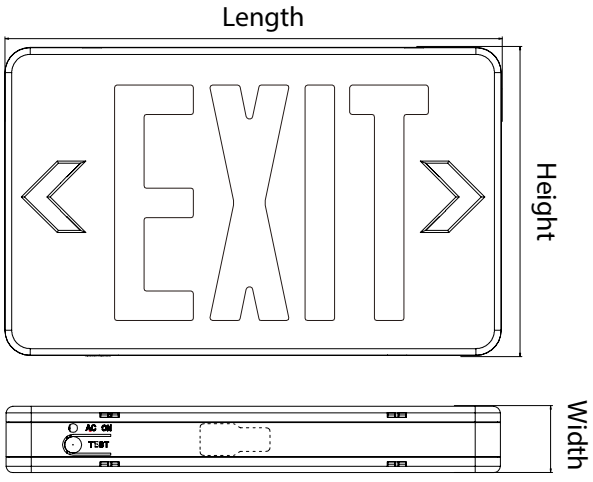

FEATURES & ACCESSORIES

- 120-277V
- Damp location rated
- UL924 Certified
- 5-Year Warranty
- Wall, ceiling or end mounted
- Includes: 2 Faceplates, 2 Green lens, 2 Red lens
- Wall, ceiling or end mounting kit
- Manual push button testing
- Ni-Cd Battery

CERTIFICATIONS

c UL US

© 2026 Litetronics
Litetronics.com
REV: 11/19/26

SPECIFICATIONS

Warranty: 5 years

PERFORMANCE

Operating temp: 32°F to 104°F (0°C to 40°C)
Efficacy (LPW): N/A
CRI: N/A

ELECTRICAL

Input voltage: 120-277V
Input frequency: 50/60Hz
Battery Type: Ni-Cd

OPTICAL

Lens: N/A
UGR: N/A

PHYSICAL

Finish: N/A
Color: White
Housing: Plastic

INDUSTRY STANDARDS/RATINGS

Location: Damp
UL: UL924

ORDERING INFORMATION

Main Fixture

Ordering Code	Description	Watts	Volts
EXRG	LED Exit Sign Red-Green	0.8	120-277V

PRODUCT OVERVIEW AND INSTALLATION

SINGLE OR DOUBLE SIDE APPLICATIONS

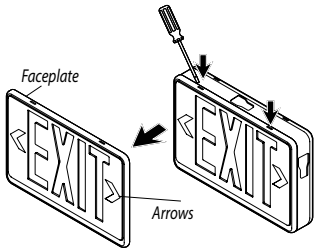

The diffuser and faceplate remove easily with simple tab releases, allowing quick customization using directional arrows. For double sided visibility, just swap the backplate with the included second faceplate—ideal for ceiling or end mount installations. Designed for fast setup and flexible mounting, this system ensures clear, dependable exit guidance wherever you need it.

CHANGING THE COLOR LENS

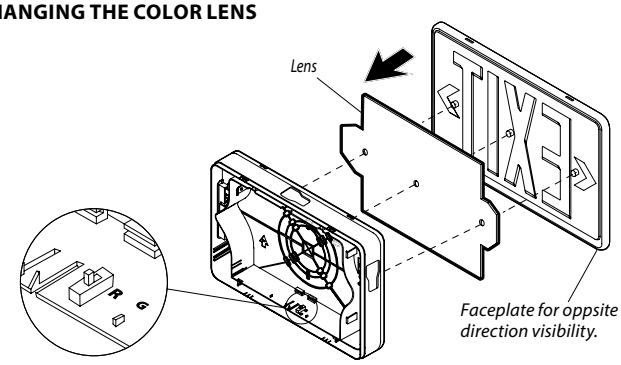

Easily change colors in three simple steps: remove the preinstalled red lens, insert the vibrant green lens, and switch the color selector to the 'G' position for brilliant, high clarity performance.

JUNCTION BOX INSTALLATION

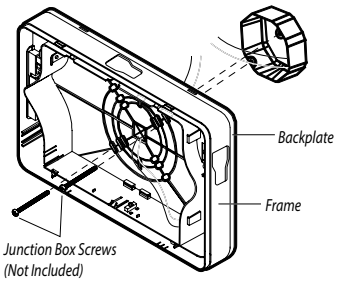

A streamlined junction box mount installs in minutes—no specialty tools, no hassle ensuring a secure, professional result every time.

CEILING OR END MOUNT INSTALLATION

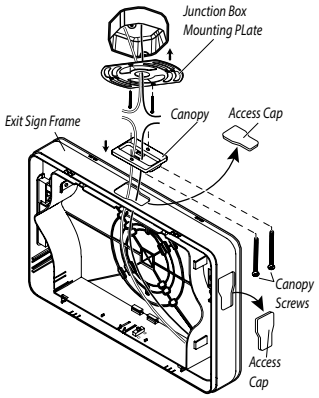

Quick-release access caps and a smooth twist-lock canopy make wiring and setup effortless, giving installers more versatility. Once aligned, the mounting plate secures easily with standard hardware—saving time and streamlining the entire install.

WALL INSTALLATION

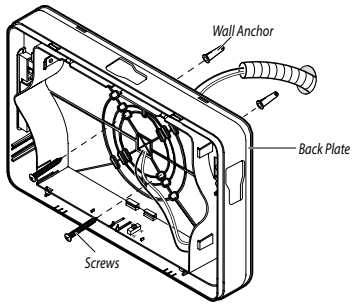

Routes power cleanly through the rear entry and uses the backplate itself as a drill template, so two anchor points and included screws deliver a fast, rigid, professional installation.

Disclaimer: Specifications are subject to change without notice. While Litetronics makes every effort to ensure accuracy, we do not guarantee the completeness or reliability of the information provided. For the most current product data, please visit www.litetronics.com.

© 2026 Litetronics
Litetronics.com
REV: 11/19/26