LITETRONICS®

LED Exit Sign Red-Green

Installation Instructions

Ordering Code: EXRG

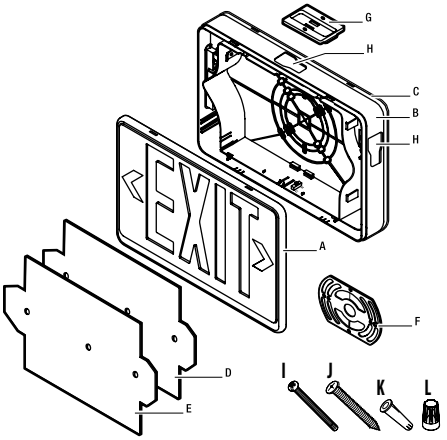

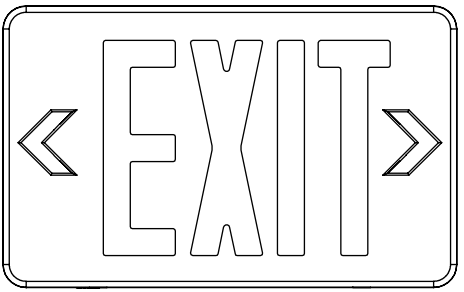

UNIT COMPONENTS

A - (2) Faceplate
B - Exit sign frame
C - Back plate
D - (2) Red lens
E - (2) Green lens
F - Junction box mounting plate
G - Canopy
H - (2) Top/side access cap
I - (2) Canopy screws
J - (2) Mounting screws
K - (2) Wall anchors
L - (3) Wire nuts

TOOLS NEEDED

Wire Stripper
Wire Cutter
Screwdriver

WHAT COMES IN THE BOX

(1) - Pre-assembled unit with red lens
(1) - Faceplate with red lens installed

ATTENTION

1. Please check if there is any damage during shipping. If so, please contact Litertronics Customer Service.
2. Please read the installation instructions carefully to check whether all the accessories are included.
3. After confirmation, install the fixture according to installation steps.

SAFETY INSTRUCTIONS AND WARNINGS

WHEN USING ELECTRICAL EQUIPMENT, BASIC SAFETY PRECAUTIONS SHOULD ALWAYS BE OBSERVED

READ AND FOLLOW ALL SAFETY INSTRUCTIONS.

- Consult a qualified electrician to ensure correct branch circuit conductor.
- This product must be installed in accordance with the applicable installation code by a person familiar with the construction and operation of the product and the hazards involved.
- Installation should only be conducted by a qualified electrician in accordance with NEC and any relevant local building codes.
- Risk of fire or electric shock. Exit Sign installation requires knowledge of luminaires electrical systems. If not qualified, do not attempt installation. Contact a qualified electrician.
- Be certain electrical power is OFF before and during installation and maintenance.
- Exit Sign must be connected to a wiring system with an equipment–grounding conductor.
- Make sure the supply voltage is the same as the rated Exit Sign voltage.
- To prevent wiring damage or abrasion, do not expose wiring to edges of sheet metal or sharp objects.
- No user serviceable parts inside of Exit Sign.

INSTALLATION INSTRUCTIONS

READ ALL INSTRUCTIONS BEFORE BEGINNING INSTALLATION

Inspect the Exit Sign to understand its components.

Before starting installation, turn off power at circuit breaker.

PREPARING THE EXIT SIGN LIGHT COMBO LIGHT

1. Remove the faceplate using a flat screwdriver. ***(Fig. 1)***
2. Remove the appropriate arrow(s) to indicate the direction of the exit based on application. ***(Fig. 1)***
3. For double-sided applications, remove the backplate using a screwdriver and replace it with the second faceplate. ***Note: Double-sided applications can only be used by ceiling or end mount.***
4. Plug in the back-up battery by connecting the battery lead to the PCB board. ***(Fig. 1)***

Figure 1

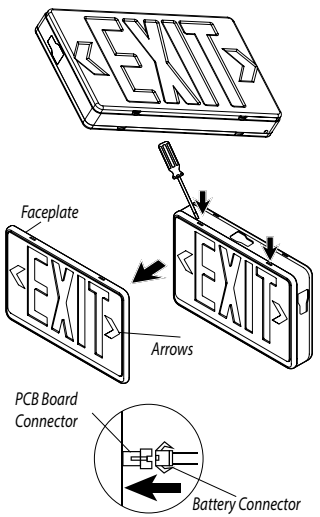

CEILING OR END MOUNT INSTALLATION

1. Remove the top/side mount access caps by pushing up and out from the underside. ***(Fig. 2)***
2. Insert the canopy into the mounting hole on the exit sign frame and lock it into place by rotating the canopy and sliding to the right, into the locking flange, until it locks into place. ***(Fig. 2)***
3. Feed the fixture wires through the appropriate top or side mounting hole and through the canopy. Pull the power supply wires from the junction box through the center hole of the junction box mounting plate. **Refer to the wiring section of this guide for wiring instructions.**
4. Feed the wire nuts back through the center hole of the junction box mounting plate into the junction box. ***(Fig. 2)***
5. Attach the junction box mounting plate to the junction box using the junction box screws (not included). ***(Fig. 2)***
6. Thread the screws through the screw holes in the canopy and attach the canopy to the junction box mounting plate. ***(Fig. 2)***

Figure 2

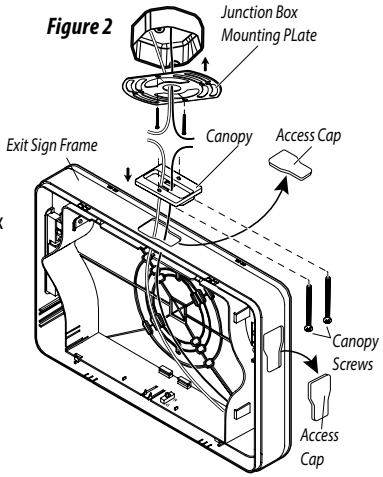

JUNCTION BOX INSTALLATION

1. Punch out the appropriate mounting pattern and wire hole on the backplate to fit the junction box. Feed the wires through the wire hole. ***(Fig. 3)***
2. Secure the frame to the junction box using junction box screws. (Not Included). ***(Fig. 3)***
3. **Refer to the wiring section of this guide for wiring instructions.**

Figure 3

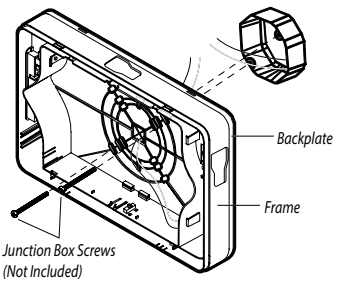

INSTALLATION INSTRUCTIONS

WALL INSTALLATION

CAUTION: USE FLEXIBLE CONDUIT ONLY.

1. Route the conduit power supply wires through the rear of the backplate and make the conduit connection. ***(Fig. 4)***
2. Using the backplate as a template, mark and drill two installation holes on the wall at the desired installation location.
3. Insert wall anchors into the holes. ***(Fig.4)***
4. Attach the backplate to the wall by inserting screws through the backplate and into the wall anchors. ***(Fig. 4)***
5. **Refer to the wiring section of this guide for wiring instructions.**

Figure 4

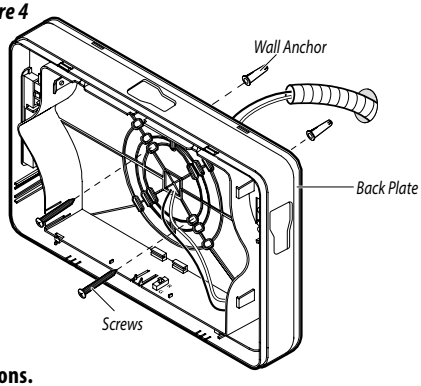

WIRING

1. Make wire connections using the wire nuts. ***(Fig. 5)***
2. For **120-277V applications**, use the red and white wires. Connect the red supply wire to the red fixture wire. Connect the white supply wire to the white fixture wire.
3. Cap unused wires using a wire nut.

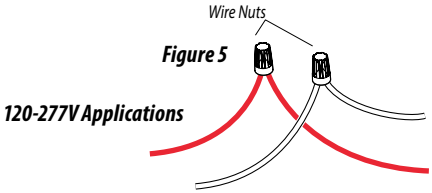

Figure 5

120-277V Applications

COMPLETING THE INSTALLATION

1. Snap the faceplate(s) onto the frame. ***(Fig. 6)***
2. Snap in the diffuser by locking tabs on both sides.
3. Restore power to the circuit. The Test button/AC Power light and the exit light should illuminate. ***(Fig.6)***
4. Allow 24 hours for the back-up battery to fully charge.

Figure 6

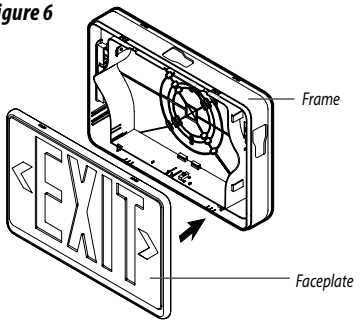

CHANGING THE COLOR (OPTIONAL)

1. Remove the preinstalled red len(s). ***(Fig.7)***
2. Insert the green len(s).
3. Move the color selection switch to the "G" position. ***(Fig.7)***

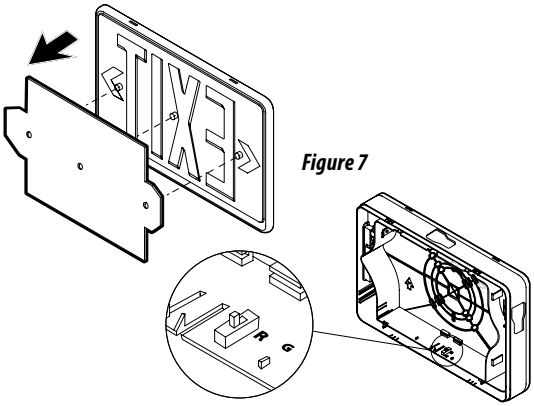

Figure 7

MAINTENANCE

TESTING OPERATION

1. With AC Power applied to the unit, the EXIT sign and A/C Power LED indicator should illuminate. When pushing the TEST button, AC power is cut off and EXIT sign illuminates via battery. ***(Fig. 8)***

Figure 8

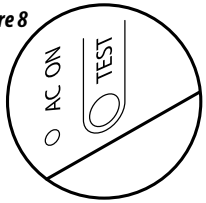

TESTING THE BATTERY

2. Test the unit's battery once per month. Additionally, every 12 months, a full 90-minute test should be performed. While disconnected from the main power supply, the EXIT sign should illuminate for a minimum of 90 minutes on battery back up power.

TROUBLESHOOTING

Problem	Possible Cause	Solution
The LED charge indicator does not illuminate	AC power supply is off.	Ensure the unit has AC power supply. Restore the power at the breaker/fuse box.
	The unit is incorrectly wired.	Ensure the unit is wired correctly.
	The battery isn't connected	Ensure the battery is connected.

Thank you for choosing

LITETRONICS®

6969 W. 73rd Street
Bedford Park, IL 60638

WWW.LITETRONICS.COM
CustomerService@Litetronics.com or 1-800-860-3392

Rev:06/23/26

The information and product specifications contained in these instructions are based upon data believed to be accurate at the time of printing. This information is subject to change without notice and without incurring liability. If you have questions regarding specific product details, please contact us at 800-860-3392 or via email at customerservice@litetronics.com.

To check for an updated version of these instructions, please visit **www.litetronics.com**.